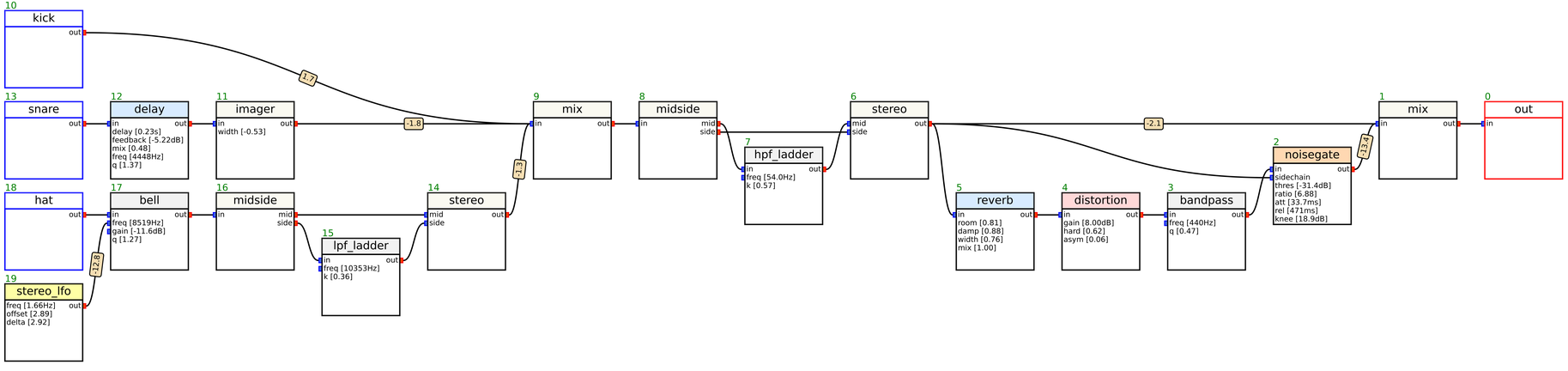
10
kick
out
13
snare
out
18
hat
out
19
stereo_lfo
freq [1.66Hz]
offset [2.89]
delta [2.92]
out
12
delay
in
delay [0.23s]
feedback [-5.22dB]
mix [0.48]
freq [4448Hz]
q [1.37]
out
17
bell
in
freq [8519Hz]
gain [-11.6dB]
q [1.27]
out
11
imager
in
width [-0.53]
out
16
midside
in
mid
side
15
lpf_ladder
in
freq [10353Hz]
k [0.36]
out
14
stereo
mid
side
out
9
mix
in
out
8
midside
in
mid
side
7
hpf_ladder
in
freq [54.0Hz]
k [0.57]
out
6
stereo
mid
side
out
5
reverb
in
room [0.81]
damp [0.88]
width [0.76]
mix [1.00]
out
4
distortion
in
gain [8.00dB]
hard [0.62]
asym [0.06]
out
3
bandpass
in
freq [440Hz]
q [0.47]
out
2
noisegate
in
sidechain
thres [-31.4dB]
ratio [6.88]
att [33.7ms]
rel [471ms]
knee [18.9dB]
out
1
mix
in
out
0
out
in
1.7
-1.8
-1.3
-2.8
-2.1
13.4